Optimal Sizing and Placement of Battery Energy Storage Systems in Renewable Energy-Based Power Networks

Juan Yu [1], **Xintong Li** [2]

1. State Key Laboratory of Power Transmission Equipment Technology, Chongqing 400045, China
2. Department of Electrical Engineering, Columbia University, New York, NY 10027, USA.
Email: xl3601@columbia.edu

Abstract The increasing integration of renewable energy sources, particularly solar and wind power, has introduced challenges to the stability and efficiency of modern power networks due to the intermittent and uncertain nature of renewable energy generation. Battery Energy Storage Systems (BESS) provide an effective solution by balancing electricity supply and demand, reducing power losses, and improving renewable energy utilization. This study investigates the optimal sizing and placement of BESS in renewable energy-based power networks, focusing on the technical, operational, and economic factors that influence storage configuration. It examines the main considerations in determining battery capacity, including renewable energy output, electricity demand, battery efficiency, and operational constraints. In addition, the study explores suitable storage locations based on network voltage conditions, power losses, and load distribution. Different optimization approaches, including Mixed-Integer Linear Programming (MILP), Genetic Algorithms (GA), and Particle Swarm Optimization (PSO), are discussed in relation to their applications in coordinated sizing and placement. The study highlights that integrating capacity and location optimization can improve network performance, reduce operational costs, and enhance the reliability of renewable energy integration. Finally, it discusses existing technical and economic challenges and identifies future research opportunities involving artificial intelligence, renewable energy forecasting, and intelligent energy management.

Keywords Battery Energy Storage System (BESS); Renewable Energy Integration; Optimal Sizing; Optimal Placement; Power Network Optimization; Energy Management.

1. Introduction

1.1 Background of Renewable Energy Integration

The increasing demand for electricity and the global transition toward low-carbon energy systems have accelerated the development of renewable energy sources, particularly solar and wind power. Compared with conventional fossil fuel-based generation, renewable energy technologies offer significant environmental benefits by reducing greenhouse gas emissions and dependence on non-renewable resources. However, their integration into existing power networks also introduces technical challenges. Solar and wind power generation are highly dependent on weather conditions, resulting in fluctuations in electricity output and uncertainty in power supply. These variations can create difficulties in maintaining the balance between electricity generation and consumption, particularly in networks with a high proportion of renewable energy sources (Yang et al.).

The increasing penetration of distributed renewable energy resources also places additional pressure on power distribution networks. Changes in power flow may contribute to voltage fluctuations, network congestion, and increased transmission and distribution losses. Therefore, improving the flexibility and operational stability of power networks has become an important consideration in renewable energy integration.

1.2 Role of Battery Energy Storage Systems

Battery Energy Storage Systems (BESS) provide an effective approach to addressing the challenges associated with renewable energy integration. By storing surplus electricity during periods of high renewable energy generation and releasing it when generation decreases or electricity demand increases, BESS can improve the coordination between energy supply and demand. In addition, battery

ISSN 3106-7018 (Print) ISSN 3106-5791 (Online)

storage can support peak load management, voltage regulation, frequency control, and overall power system reliability (Rana et al.).

The application of BESS is particularly valuable in distribution networks incorporating solar and wind energy. Appropriate storage configurations can reduce network power losses, improve voltage profiles, and increase the utilization of renewable energy. Nevertheless, the effectiveness of battery storage depends not only on its technical characteristics but also on its installation capacity and geographical location. An unsuitable configuration may increase investment costs or limit the expected operational benefits (Chedid and Sawwas).

1.3 Research Objectives and Scope

Although battery energy storage has demonstrated considerable potential in improving power system performance, determining its optimal capacity and installation location remains a challenging task. Excessive storage capacity may result in unnecessary investment costs, while insufficient capacity may limit the system's ability to manage renewable energy fluctuations. Similarly, inappropriate placement may reduce the effectiveness of energy storage in improving network performance. Therefore, sizing and placement should be considered together when planning BESS integration (Yang et al.).

This study aims to investigate the optimal sizing and placement of battery energy storage systems in renewable energy-based power networks. It focuses on the technical and economic factors influencing storage allocation, including renewable energy generation, electricity demand, power losses, voltage stability, and investment costs. Furthermore, the study examines commonly used optimization methods and evaluates their potential applications in identifying suitable storage configurations. Through this analysis, the research seeks to provide a theoretical basis for improving renewable energy utilization, enhancing power network reliability, and reducing overall operating costs.

2. Battery Energy Storage Systems in Renewable Energy Networks

2.1 Structure and Operating Principles of BESS

A Battery Energy Storage System (BESS) is an integrated energy storage solution designed to store electrical energy and release it when required by the power network. A typical BESS consists of battery cells, a power conversion system (PCS), a battery management system (BMS), and an energy management system (EMS). The battery cells serve as the primary energy storage component, while the PCS converts electrical energy between alternating current (AC) and direct current (DC). The BMS monitors battery conditions, including voltage, temperature, and state of charge (SOC), to ensure safe and efficient operation. Meanwhile, the EMS coordinates charging and discharging activities according to electricity demand and network operating conditions (Luo et al.).

The operating principle of BESS is based on storing surplus electricity during periods of low demand or high renewable energy generation and releasing stored energy when electricity demand increases or renewable generation decreases. SOC is an important operational parameter that indicates the remaining energy stored in a battery relative to its rated capacity. Maintaining SOC within appropriate upper and lower limits helps prevent overcharging and excessive discharging, thereby improving battery performance and extending its service life (Dunn et al.).

2.2 Integration with Solar and Wind Energy

BESS can be integrated with renewable energy generation systems to reduce the impact of fluctuations in solar and wind power output. In photovoltaic systems, excess electricity generated during periods of strong sunlight can be stored for later use, particularly during evening hours when solar generation decreases but electricity demand may remain high. Similarly, battery storage can absorb surplus electricity produced by wind farms during periods of strong wind and release it when wind generation becomes insufficient.

This integration improves the flexibility of renewable energy-based power networks by reducing the mismatch between electricity generation and consumption. BESS can also help smooth short-term fluctuations in renewable energy output and reduce the amount of electricity that must be curtailed when generation exceeds network demand. Furthermore, coordinated operation between renewable energy sources and battery storage can improve the reliability of electricity supply and support the wider adoption of clean energy technologies (Luo et al.).

2.3 Technical and Economic Considerations

The performance of BESS depends on several technical and economic factors. From a technical perspective, battery capacity, charging and discharging power, round-trip efficiency, and cycle life are important indicators when evaluating storage performance. Different battery technologies have different characteristics. Lithium-ion batteries are widely used in grid-scale applications because of their relatively high energy density, high efficiency, and flexible operating capabilities. Other technologies, such as sodium-sulfur and redox flow batteries, may also be suitable for specific applications depending on storage duration and operational requirements (Asian Development Bank 4–5; Dunn et al.).

From an economic perspective, the initial investment cost of battery equipment represents a major consideration in BESS deployment. Additional expenses include installation, power conversion equipment, operation, maintenance, and potential battery replacement. Battery degradation also affects long-term economic performance because repeated charging and discharging gradually re-

duce available storage capacity. Therefore, selecting an appropriate battery technology requires balancing technical performance with total lifecycle costs. An economically effective BESS configuration should provide sufficient storage capacity and operational flexibility while minimizing investment and maintenance expenses (Luo et al.; Asian Development Bank 18–22).

3. Optimal Sizing of Battery Energy Storage Systems

3.1 Factors Affecting Storage Capacity

Determining the appropriate capacity of a Battery Energy Storage System (BESS) is an important step in renewable energy-based power network planning. The required storage capacity depends on several factors, including renewable energy generation, electricity demand, battery efficiency, and expected operating conditions. For example, solar and wind power generation may vary significantly throughout the day due to weather conditions. Therefore, the storage system must have sufficient capacity to absorb surplus electricity during periods of high generation and provide additional power when renewable energy output decreases. Meanwhile, electricity demand patterns also influence the required battery capacity, particularly during peak consumption periods (Yang et al.).

The important consideration is battery performance. Charging and discharging efficiency, depth of discharge (DoD), and state of charge (SOC) determine how much stored energy can be effectively utilized. A battery with a higher rated capacity does not necessarily provide the same amount of usable energy because operational limits and energy conversion losses must also be considered. In addition, battery degradation gradually reduces available capacity over time, making service life an important factor in long-term sizing decisions (Hannan et al.).

3.2 Sizing Optimization Objectives

The primary objective of BESS sizing optimization is to identify a storage capacity that balances technical performance and economic feasibility. From an economic perspective, the optimization process generally aims to minimize the total system cost, including battery investment, installation, maintenance, and operational expenses. An oversized battery system may increase initial investment without generating sufficient additional benefits, whereas an undersized system may fail to provide adequate support during periods of high demand or low renewable energy generation (Jaradat and Khatib).

To cost reduction, sizing optimization also considers improvements in power system performance. Appropriate storage capacity can reduce renewable energy curtailment, decrease peak demand, improve energy utilization, and enhance electricity supply reliability. Boonluk et al. demonstrate that minimizing power losses, voltage deviations, and peak demand can be incorporated into the optimization objectives when determining suitable BESS configurations. Therefore, an effective sizing strategy should consider both economic and technical performance rather than focusing exclusively on battery capacity.

3.3 Technical and Operational Constraints

During the sizing optimization process, several technical constraints must be considered to ensure safe and reliable battery operation. First, the SOC of the battery must remain within predefined upper and lower limits to prevent overcharging and excessive discharging. Second, the charging and discharging power must not exceed the rated power capacity of the battery system. These restrictions ensure that the battery operates within its technical capabilities and maintains sufficient energy for future demand. In addition, power balance within the network must be maintained throughout the operating period (Hannan et al.).

Battery degradation is another important constraint because frequent charging and discharging can gradually reduce the battery's available capacity and overall service life. Therefore, optimization models should consider battery aging and replacement costs when evaluating long-term system performance. Reliability requirements should also be included to ensure that the selected storage capacity can meet electricity demand under different renewable energy generation conditions. As demonstrated by Boonluk et al., incorporating battery capacity limitations, voltage constraints, and network operating conditions can help identify a more suitable storage configuration. These considerations are essential for achieving a balance between technical reliability, economic efficiency, and long-term operational sustainability.

4. Optimal Placement of Battery Energy Storage Systems

4.1 Factors Influencing Storage Location

Determining the optimal location of Battery Energy Storage Systems (BESS) is essential for improving the operational performance of renewable energy-based power networks. Unlike capacity optimization, which focuses on how much energy should be stored, placement optimization determines where storage systems should be installed to achieve the greatest technical and economic benefits. Several factors influence this decision, including renewable energy connection points, electricity load distribution, network voltage levels, and transmission line conditions (Das et al.).

The location of renewable energy generation is particularly important. Installing BESS near solar or wind power facilities allows surplus electricity to be stored locally, reducing the pressure caused by fluctuations in renewable energy output. However, locating storage systems near generation facilities does not always guarantee optimal network performance. Electricity demand distribution and

ISSN 3106-7018 (Print) ISSN 3106-5791 (Online)

the electrical characteristics of individual network nodes must also be considered. For example, installing BESS near areas with high electricity demand may improve local power supply and reduce the distance over which electricity needs to be transmitted (Chedid and Sawwas).

4.2 Placement Optimization Objectives

The primary objective of BESS placement optimization is to identify installation locations that improve network performance while minimizing overall system costs. One important objective is reducing active power losses. In distribution networks, electricity transmission through resistance-bearing lines results in energy losses. Strategically locating BESS near appropriate network nodes can reduce unnecessary power transmission and improve energy distribution efficiency (Chedid and Sawwas).

Voltage stability improvement is another major objective. High penetration of renewable energy sources may cause voltage fluctuations, particularly in distribution networks with changing generation and consumption patterns. Properly located BESS can provide active and reactive power support, helping maintain voltage levels within acceptable operating limits. In addition, optimal placement can reduce line congestion and improve the network's ability to accommodate renewable energy generation. These benefits demonstrate that BESS location selection should consider multiple technical objectives alongside investment and operational costs (Das et al.).

4.3 Centralized and Distributed Storage Strategies

BESS can generally be installed using centralized or distributed storage strategies. Centralized storage involves installing a relatively large battery system at a specific location, such as a substation or major renewable energy connection point. This approach simplifies system management and allows energy storage to be controlled centrally. It is particularly suitable for large-scale renewable energy projects where electricity generation and storage operations need to be coordinated. However, its effectiveness may be limited when electricity demand is distributed across multiple areas of the network (Wong et al.).

In contrast, distributed storage involves installing multiple smaller battery systems at different nodes throughout the distribution network. This approach provides greater flexibility because storage units can respond to local electricity demand and network conditions. Distributed BESS may also improve voltage profiles and reduce power losses in specific sections of the network. However, coordinating multiple storage units requires more complex energy management and control strategies (Wong et al.).

5. Coordinated Optimization of Sizing and Placement

5.1 Relationship Between Sizing and Placement

Optimal sizing and placement are closely interconnected in the planning of Battery Energy Storage Systems (BESS). Sizing determines the energy capacity and power rating of a battery, while placement identifies the most suitable network nodes for installation. These decisions directly influence each other because the effectiveness of a particular storage capacity depends on its location within the power network. For example, a battery installed near a renewable energy generation facility may help absorb excess electricity, whereas a battery located near a high-demand area may provide more effective local voltage support and peak load reduction. Therefore, optimizing sizing and placement separately may not produce the most efficient overall configuration (Khunkitti et al.)(Figure 1).

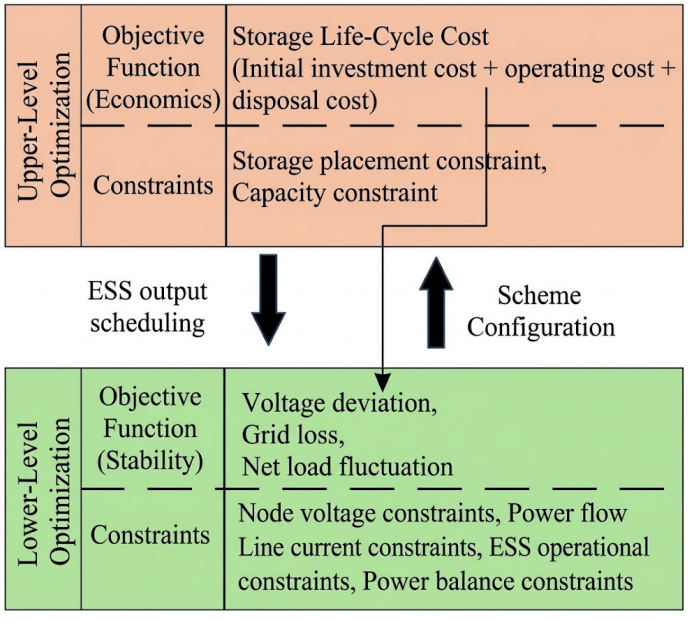

Figure 1. Bi-Level Optimization Framework for BESS Sizing and Placement

A coordinated optimization approach considers storage capacity, installation location, and charging and discharging schedules within a unified planning framework. This allows researchers to evaluate the combined effects of different storage configurations on network performance and economic costs. Consequently, joint optimization is important for achieving a balance between investment costs, operational efficiency, and power system reliability.

5.2 Optimization Methods

Several optimization techniques can be applied to determine the appropriate sizing and placement of BESS. Mixed-Integer Linear Programming (MILP) is a mathematical optimization method that combines continuous variables, such as battery capacity and charging power, with binary variables representing installation decisions. It is suitable for solving constrained planning problems involving investment costs, power balance, and network operating limits.

Metaheuristic algorithms, including Genetic Algorithms (GA) and Particle Swarm Optimization (PSO), are also widely used in BESS optimization. GA is based on evolutionary processes such as selection, crossover, and mutation, while PSO searches for optimal solutions through the collective movement of candidate solutions. Khunkitti et al. applied GA, PSO, and the Salp Swarm Algorithm (SSA) to IEEE 33-bus and 69-bus distribution systems. Their study demonstrated that these algorithms could identify suitable storage locations and capacities while improving network performance. The results also highlighted the competitive performance of PSO and SSA in minimizing system costs (Khunkitti et al.). The overall optimization process for BESS siting and sizing is illustrated in Figure 2.

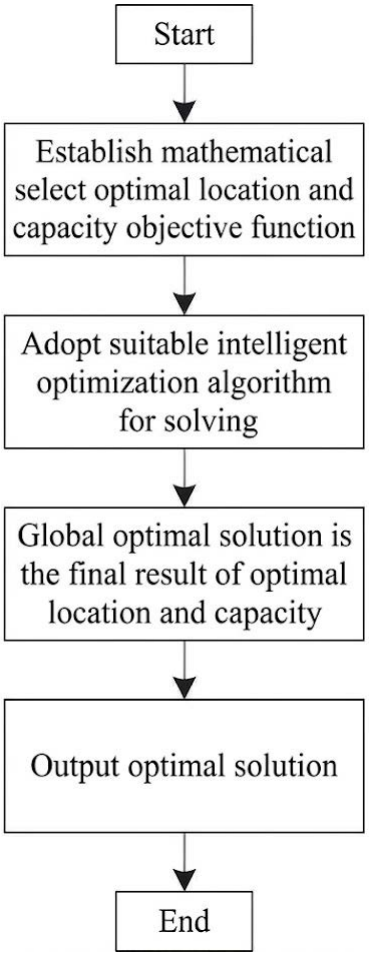

Figure 2. Flowchart of the BESS Siting and Sizing Optimization Process.

5.3 Case Study Based on the IEEE 33-Bus Distribution Network

The IEEE 33-bus distribution network can be adopted as a benchmark system to investigate the coordinated optimization of BESS sizing and placement. It is a commonly used radial distribution network consisting of 33 buses and 32 branches. Its relatively simple structure makes it suitable for evaluating power flow, voltage regulation, and energy storage integration. In an existing study, Khunkitti et al. used this network to investigate BESS allocation under high photovoltaic (PV) and wind turbine (WT) penetration. Their model considered a 12.66 kV substation voltage and a 10 MVA base capacity (Khunkitti et al.). The IEEE 33-bus distribution network provides a benchmark configuration for evaluating BESS integration and its effects on distribution system performance, as illustrated in Figure 3.

ISSN 3106-7018 (Print) ISSN 3106-5791 (Online)

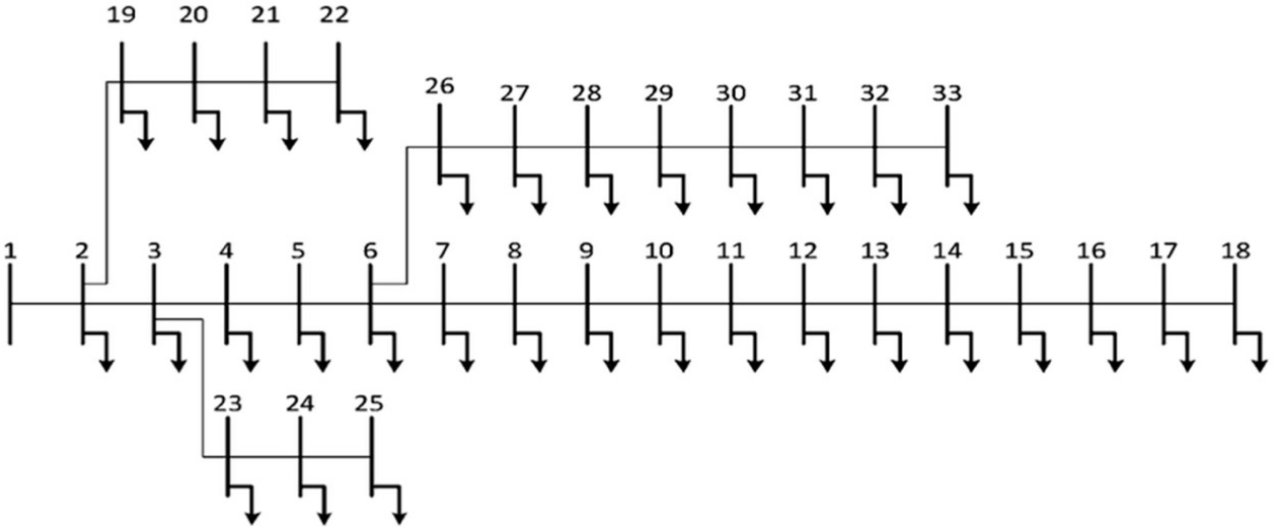

Figure 3. IEEE 33-Bus Distribution Network with Renewable Energy Sources and Battery Energy Storage System

Note: This figure is an illustrative diagram rather than an exact representation of the original IEEE 33-bus test system. The locations of renewable energy sources and BESS are conceptual and do not represent actual optimized installation results.

For this study, PV and wind generation can be introduced at selected network nodes to simulate renewable energy integration. Candidate BESS installation locations can then be selected from the distribution network, with battery capacity and charging and discharging power treated as optimization variables. The objective is to minimize total system costs while maintaining acceptable voltage levels and satisfying battery operating constraints.

To evaluate the effectiveness of different configurations, four scenarios can be established:

- Scenario 1: Original distribution network without BESS installation.
- Scenario 2: BESS installation with optimized battery capacity but predefined locations.
- Scenario 3: BESS installation with optimized locations but predefined battery capacity.
- Scenario 4: Joint optimization of BESS capacity and installation locations.

These scenarios provide a basis for comparing the individual and combined effects of storage sizing and placement. The IEEE 33-bus system has previously been used to evaluate different optimization algorithms and BESS configurations, demonstrating its suitability for this type of research (Khunkitti et al.).

5.4 Performance Evaluation and Comparative Analysis

The effectiveness of coordinated BESS optimization can be evaluated through several technical and economic indicators. These include total investment and operating costs, active power losses, voltage deviation, peak demand, and renewable energy utilization. Comparing these indicators across the four scenarios can help determine whether the selected configuration improves overall network performance.

The different optimization algorithms can be compared in terms of solution quality, computational efficiency, and convergence performance. Khunkitti et al. found that BESS installation in the IEEE 33-bus system could reduce system costs, improve voltage profiles, decrease power losses, and achieve peak shaving. Their findings demonstrate the potential benefits of combining optimal sizing and placement in distribution networks (Khunkitti et al.).

6. Challenges and Future Research Directions

Despite the advantages of Battery Energy Storage Systems (BESS), several challenges remain in their practical application. One major issue is the uncertainty of renewable energy generation. Solar and wind power output is strongly influenced by weather conditions, making it difficult to accurately predict electricity generation and determine the required storage capacity. Changes in electricity demand further increase the complexity of storage planning and operation (Reza et al.).

Battery degradation is another important concern. Repeated charging and discharging gradually reduce battery capacity and efficiency, which may increase maintenance and replacement costs. In addition, the high initial investment associated with battery installation can limit the economic feasibility of large-scale storage projects. Therefore, BESS optimization must consider not only initial investment and network performance but also long-term battery degradation, operational uncertainty, and lifecycle costs (Elalfy et al.).

Future research should focus on improving the accuracy and flexibility of BESS optimization methods. Artificial intelligence and machine learning can support renewable energy forecasting, battery health estimation, and intelli-

gent charging and discharging strategies. These technologies may help storage systems respond more effectively to changing electricity demand and renewable energy output (Wang et al.). Future studies should investigate the integration of different energy storage technologies and the application of real-time optimization in smart grids. Combining advanced forecasting methods with coordinated sizing, placement, and energy management could improve system reliability and economic performance.

7. Conclusion

The optimal sizing and placement of Battery Energy Storage Systems (BESS) play an important role in improving the performance of renewable energy-based power networks. As the integration of solar and wind power continues to increase, the intermittent nature of renewable energy generation creates challenges for maintaining electricity supply and demand balance, voltage stability, and overall network reliability. BESS provides an effective solution by storing surplus electricity and releasing it when required, thereby improving the flexibility and efficiency of power systems (Luo et al.).

This study has examined the major factors influencing BESS sizing and placement, including renewable energy generation, electricity demand, battery performance, network conditions, and economic considerations. Appropriate capacity configuration can help reduce investment costs, improve energy utilization, and minimize renewable energy curtailment. Meanwhile, suitable installation locations can reduce power losses, improve voltage profiles, and alleviate network congestion. The analysis also highlights that sizing and placement should be considered together rather than as independent planning decisions, as their combined optimization can produce more effective storage configurations.

References

[1] Asian Development Bank. Handbook on Battery Energy Storage System. Asian Development Bank, 2018. https://doi.org/10.22617/TCS189791-2.

[2] Boonluk, Panyawoot, et al. “Optimal Siting and Sizing of Battery Energy Storage Systems for Distribution Network of Distribution System Operators.” Batteries, vol. 6, no. 4, 2020, article 56. https://doi.org/10.3390/batteries6040056.

[3] Celli, Gianni, et al. “Distribution Energy Storage Investment Prioritization with a Real Coded Multi-Objective Genetic Algorithm.” Electric Power Systems Research, vol. 163, 2018, pp. 154–63. https://doi.org/10.1016/j.epsr.2018.06.008.

[4] Chedid, Riad, and Ahmad Sawwas. “Optimal Placement and Sizing of Photovoltaics and Battery Storage in Distribution Networks.” Energy Storage, vol. 1, no. 4, 2019, article e46. https://doi.org/10.1002/est2.46.

[5] Das, Choton K., et al. “Overview of Energy Storage Systems in Distribution Networks: Placement, Sizing, Operation, and Power Quality.” Renewable and Sustainable Energy Reviews, vol. 91, 2018, pp. 1205–30. https://doi.org/10.1016/j.rser.2018.03.068.

[6] Dunn, Bruce, Haresh Kamath, and Jean-Marie Tarascon. “Electrical Energy Storage for the Grid: A Battery of Choices.” Science, vol. 334, no. 6058, 2011, pp. 928–35. https://doi.org/10.1126/science.1212741.

[7] Elalfy, Dina A., et al. “Comprehensive Review of Energy Storage Systems Technologies, Objectives, Challenges, and Future Trends.” Energy Strategy Reviews, vol. 54, 2024, article 101482. https://doi.org/10.1016/j.esr.2024.101482.

[8] Hannan, M. A., et al. “Battery Energy-Storage System: A Review of Technologies, Optimization Objectives, Constraints, Approaches, and Outstanding Issues.” Journal of Energy Storage, vol. 42, 2021, article 103023. https://doi.org/10.1016/j.est.2021.103023.

[9] Jaradat, Tha’er, and Tamer Khatib. “Optimal Sizing of Battery Energy Storage System in Electrical Power Distribution Network.” Energy Exploration & Exploitation, vol. 43, no. 3, 2025, pp. 909–31. https://doi.org/10.1177/01445987241300183.

[10] Khunkitti, Sirote, et al. “Optimal Location and Sizing of BESS for Performance Improvement of Distribution Systems with High DG Penetration.” International Transactions on Electrical Energy Systems, vol. 2022, 2022, article 6361243. https://doi.org/10.1155/2022/6361243.

[11] Luo, Xing, et al. “Overview of Current Development in Electrical Energy Storage Technologies and the Application Potential in Power System Operation.” Applied Energy, vol. 137, 2015, pp. 511–36. https://doi.org/10.1016/j.apenergy.2014.09.081.

[12] Reza, M. S., et al. “Uncertainty Parameters of Battery Energy Storage Integrated Grid and Their Modeling Approaches: A Review and Future Research Directions.” Journal of Energy Storage, vol. 68, 2023, article 107698. https://doi.org/10.1016/j.est.2023.107698.

[13] Song, Hui, et al. “Smart Optimization in Battery Energy Storage Systems: An Overview.” Energy and AI, vol. 17, 2024, article 100378. https://doi.org/10.1016/j.egyai.2024.100378.

[14] Wong, Ling Ai, et al. “Review on the Optimal Placement, Sizing and Control of an Energy Storage System in the Distribution Network.” Journal of Energy Storage, vol. 21, 2019, pp. 489–504. https://doi.org/10.1016/j.est.2018.12.015.

[15] Yang, Bo, et al. “Optimal Sizing and Placement of Energy Storage System in Power Grids: A State-of-the-Art One-Stop Handbook.” Journal of Energy Storage, vol. 32, 2020, article 101814. https://doi.org/10.1016/j.est.2020.101814.